Demultiplexer for optical orthogonal frequency-division multiplexing using an optical fast-Fourier-transform circuit

K. Takiguchi,[1,*] M. Oguma,[1] T. Shibata,[1,2] and H. Takahashi[1]

[1]NTT Photonics Laboratories, NTT Corporation, 3-1 Morinosato Wakamiya, Atsugi, Kanagawa, 243-0198 Japan
[2]Present affiliation: NTT Electronics Corporation, 3-1 Morinosato Wakamiya, Atsugi, Kanagawa, 243-0198 Japan
*Corresponding author: taki@aecl.ntt.co.jp

Received March 13, 2009; accepted May 5, 2009;
posted May 14, 2009 (Doc. ID 108745); published June 9, 2009

An integrated-optic device for demultiplexing optical orthogonal frequency-division-multiplexed signals is described that consists of an optical fast-Fourier-transform circuit and optical gates. The fast-Fourier-transform circuit is composed of symmetrical Mach–Zehnder interferometers that are suitable for precisely adjusting filter characteristics. This device can process four or more channels with a relatively simple configuration and reduced size. An optical demultiplexer for four subcarrier channels is realized and used to demultiplex 4×10 Gbit/s signals. © 2009 Optical Society of America

OCIS codes: 130.3120, 130.7408, 250.4745, 060.4510.

Optical orthogonal frequency-division-multiplexing (OFDM) technology is being widely investigated because it can achieve high spectral efficiency, for example, up to 1 bit/s/Hz for binary data signals, by generating subcarrier signals that are orthogonal to each other [1–5]. With optical OFDM, since the data speed at each subcarrier channel can be set at a relatively low bit rate, the signals are tolerant to chromatic and polarization-mode dispersion in fibers. The channels cannot be demultiplexed at the receiver with conventional optical frequency filters, because the channel spectra overlap each other. The discrete Fourier transform (DFT) procedure is indispensable for demultiplexing the channels, and DFT is carried out with an optical or electrical processing scheme. The former scheme [1] uses the combination of an asymmetrical Mach–Zehnder interferometer (MZI) and an optical gate to directly demultiplex the OFDM channels in the optical domain. The MZI functions as an optical DFT circuit for distinguishing two channels, and a 5 Gbit/s subcarrier has been successfully demultiplexed. However, it is difficult to demultiplex four or more OFDM channels with a DFT, because the DFT configuration becomes more complex as the channel number increases. The latter utilizes offline processing, because integrated circuits for electrical digital signal processing cannot yet process Gbit/s-order OFDM signals [3–5].

In this Letter, we propose a device for demultiplexing optical OFDM channels by utilizing optical fast Fourier transform (FFT) technology [6]. We propose an optical FFT circuit composed of symmetrical MZIs that are suitable for precisely adjusting filter characteristics. This device can process four or more OFDM channels with a relatively simple configuration and a smaller size than a device based on the optical DFT. We realized an optical device capable of demultiplexing four OFDM channels in the optical domain with silica planar lightwave circuit (PLC) technology and successfully demonstrated its operation and effectiveness by demultiplexing 4×10 Gbit/s signals.

Subcarrier signals $d_n(t)$ ($n=0$ to $N-1$) are demultiplexed from an OFDM signal $S(t)$ with the following DFT [1]:

$$d_n(t)=\sum_{g=0}^{N-1} S(g\Delta t)e^{-j2\pi Tg(f_0+n/T)/N},\quad \Delta t=\frac{T}{N}, \tag{1}$$

where f_0 and T are a carrier frequency of $d_0(t)$ and the bit period of each subcarrier signal, respectively. Equation (1) is also expressed with an $N\times N$ matrix, none of whose elements is zero. In general, to realize this matrix with optical circuits requires N $1\times N$ splitters and $N\times1$ combiners, and N^2 connecting waveguides for the splitters and the combiners, which makes the configuration large and complex. When N is 4, the DFT in Eq. (1) is modified into an FFT as shown in the following equation, which greatly mitigates both computational and device complexity:

$$\begin{aligned}\begin{pmatrix} d_0(t)\\ d_2(t)\\ d_1(t)\\ d_3(t)\end{pmatrix} &= \begin{pmatrix} 1 & 1 & 0 & 0\\ 1 & -1 & 0 & 0\\ 0 & 0 & 1 & e^{-j\pi/2}\\ 0 & 0 & 1 & -e^{-j\pi/2}\end{pmatrix}\\ &\times\begin{pmatrix} S(0)+S(2\Delta t)e^{-j\pi f_0T}\\ S(\Delta t)e^{-j\pi f_0T/2}+S(3\Delta t)e^{-j3\pi f_0T/2}\\ S(0)-S(2\Delta t)e^{-j\pi f_0T}\\ S(\Delta t)e^{-j\pi f_0T/2}-S(3\Delta t)e^{-j3\pi f_0T/2}\end{pmatrix}\\ &\equiv\begin{pmatrix} 1 & 1 & 0 & 0\\ 1 & -1 & 0 & 0\\ 0 & 0 & 1 & e^{-j\pi/2}\\ 0 & 0 & 1 & -e^{-j\pi/2}\end{pmatrix}\begin{pmatrix} S1(0)+S1(2\Delta t)\\ S1(\Delta t)+S1(3\Delta t)\\ S1(0)-S1(2\Delta t)\\ S1(\Delta t)-S1(3\Delta t)\end{pmatrix}.\end{aligned} \tag{2}$$

Figure 1 shows the configuration of our proposed demultiplexer for 4×10 Gbit/s OFDM signal. It is

 © 2009 Optical Society of America

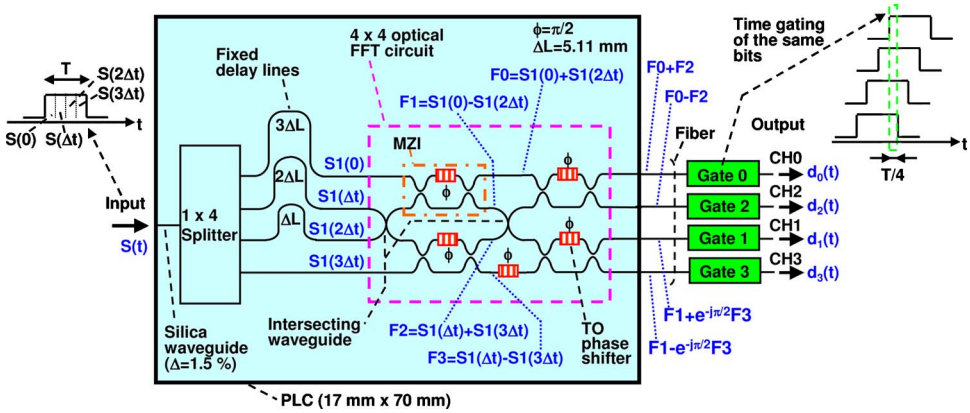

Fig. 1. (Color online) Configuration of our demultiplexer for the OFDM signal.

composed of a silica PLC-based circuit (a 1×4 splitter, fixed delay lines, and a 4×4 optical FFT circuit) and optical gates [electro-absorption (EA) modulators] that are attached to the PLC through fibers. The PLC chip size and relative index difference of the waveguide were 17×70 mm^2 and 1.5%, respectively. Polarization dependence of the device is eliminated by inserting a half-wave plate in the middle of the delay lines. The modulation bandwidth and the loss of the EA modulator were 40 GHz and 8.5 dB, respectively. The input OFDM signal $S(t)$ is introduced into the PLC circuit and is split equally into four signals that are relatively delayed by $3\Delta t$, $2\Delta t$, and Δt with a view to obtaining the signal $S1(g\Delta t)$ ($g=0$ to 3), where $\Delta t=T/4=\Delta L/c$ (c, the speed of light in the waveguide). The symmetrical MZI with 3 dB couplers has the following transfer matrix T when the phase shift ϕ between the two arms is set at $\pi/2$ [7]:

$$T=-j\begin{pmatrix}\sin\frac{\phi}{2} & \cos\frac{\phi}{2}\\ \cos\frac{\phi}{2} & -\sin\frac{\phi}{2}\end{pmatrix}=-\frac{j}{\sqrt{2}}\begin{pmatrix}1 & 1\\ 1 & -1\end{pmatrix}. \qquad (3)$$

Therefore, the upper and lower rows of the matrix T output the addition and subtraction of two input signals, respectively, and the combination of symmetrical MZIs can be used to exactly realize an optical FFT, namely, the product of the two matrices in Eq. (2). The part enclosed by broken lines in Fig. 1 shows the 4×4 optical FFT circuit of the signal $S1(g\Delta t)$, which is composed of four symmetrical MZIs with tunable thermo-optic (TO) phase shifters and a tunable TO phase shifter. The two MZIs on the left and the combination of the two MZIs on the right and the bottom TO phase shifter correspond to the right and left matrices, which are the product of the two matrices in Eq. (2), respectively. The symmetrical MZIs also function as tunable couplers for balancing optical intensity. The orthogonal properties between subcarrier signals are maintained within a 1 bit period. Therefore, to demultiplex each subcarrier channel completely, we need to extract the duration $T/4$, where the same $S1(t)$ bits overlap, with the optical gates at the PLC output.

Figure 2 shows our experimental setup for evaluating the OFDM demultiplexer. We used four distributed-feedback laser diodes (DFB-LDs) whose wavelengths were set at 1550.49 to 1550.73 nm with a frequency spacing of 10 GHz. A combined light from LD_i and LD_{i+2} is modulated with a $LiNbO_3$ (LN) modulator MOD_{i+1} ($i=0$, 1). The two LN modulators are driven with two sequences of non-return-to-zero 10 Gbit/s data from two synchronized pulse-pattern generators (PPGs) so that adjacent channels are differently modulated. The two differently modulated lights are combined after adjusting their bit synchronization by tuning the electrical phase difference between the PPG outputs. These procedures correspond to an inverse DFT of the subcarrier signals $d_n(t)$ ($n=0$ to 3) and generate a 4×10 Gbit/s OFDM signal. The OFDM signal $S(t)$ is introduced into our proposed OFDM demultiplexer. Four demultiplexed subcarrier signals are converted into electrical signals, and their bit error rates (BERs) are evaluated with an error detector (ED).

Figure 3 shows the calculated and measured transmittance spectra of the PLC in Fig. 1. The calculation indicates that the filter has a 3 dB down bandwidth of about 10 GHz at the demultiplexed channel and steep extinction characteristics of more than 40 dB at the three other unwanted channels without chromatic dispersion characteristics. The measured characteristics of the four PLC outputs almost coincided with the calculation, and their extinction ratios were around 20 to 30 dB, except for CH3. The minimum fiber-to-fiber losses of CH0 to 3 were 1.8, 2.4, 1.9, and 2.3 dB, respectively. Figure 4 shows the measured

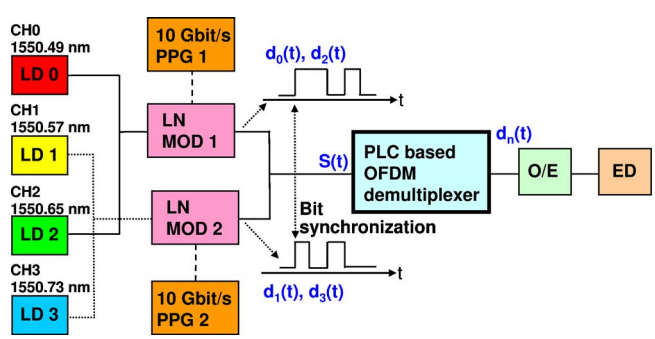

Fig. 2. (Color online) Experimental setup for evaluating our OFDM demultiplexer.

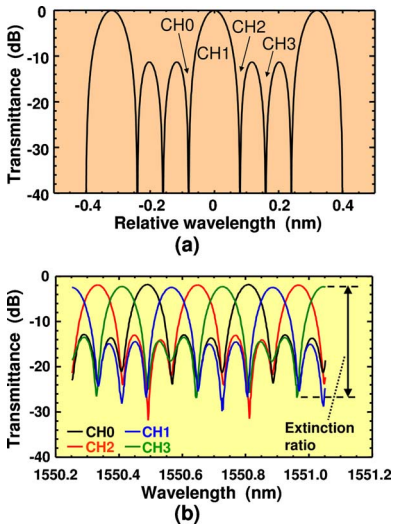

Fig. 3. (Color online) (a) Calculated and (b) measured wavelength characteristics of the PLC filter.

spectra of the 4×10 Gbit/s OFDM signal and the filtered signal of CH1 after passing the PLC. The signal at CH1 was clearly extracted from the OFDM signal. Figure 5 shows BERs measured under a back-to-back condition. The closed circles indicate the reference BER when only the CH1 signal was input into the PLC. We were able to achieve an error rate of the order of 10^{-9} for all four demultiplexed channels, and the power penalty compared with the reference value was 0.5 to 2.0 dB at a BER of 10^{-9}. An eye pattern of CH1 at a BER of 10^{-9} is inset in Fig. 5. Figure 5 confirms that we successfully distinguished a desired channel from among the OFDM signal with a spectral efficiency of 1 bit/s/Hz using our proposed OFDM demultiplexer. We attribute the power penalty to the crosstalk of other channels caused by the imperfect operation of the PLC filter owing to the phase adjustment error. The power penalty of CH0 is relatively low (0.5 dB), because this channel does not suffer from the crosstalk from a shorter wavelength channel. By contrast, the CH3 penalty (2.0 dB) is higher than expected, because the extinction ratio of the unwanted CH1 deteriorated (16.3 dB).

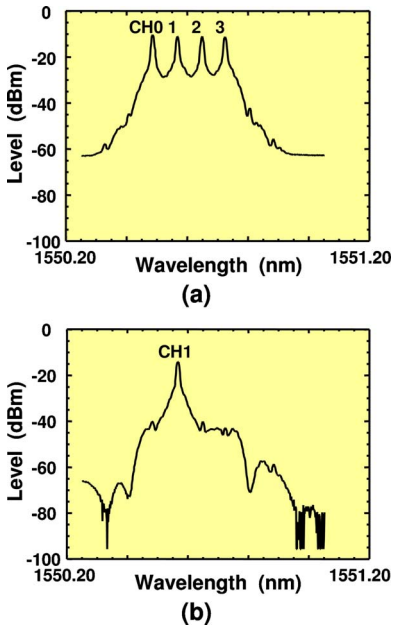

Fig. 4. (Color online) (a) Measured spectra of the OFDM signal and (b) its filtered signal with the PLC.

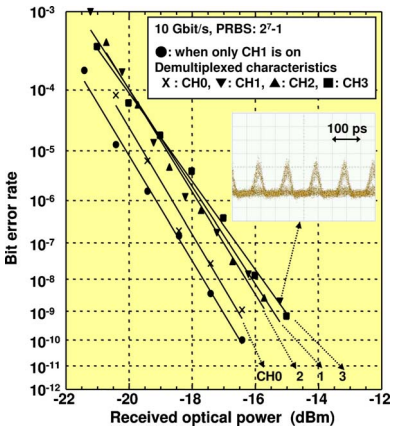

Fig. 5. (Color online) Measured BERs. PRBS, pseudorandom bit sequence.

In summary, we proposed and demonstrated a device that can directly demultiplex optical OFDM channels in the optical domain based on an optical FFT circuit. This device is composed of a silica PLC and EA-modulator-based optical gates and can process four OFDM channels with a relatively simple configuration compared with a device based on the optical DFT. We successfully showed the feasibility and effectiveness of our device by distinguishing a desired channel from among 4×10 Gbit/s OFDM signal.

References

1. H. Sanjoh, E. Yamada, and Y. Yoshikuni, in *Optical Fiber Communication Conference (OFC)* (Optical Society of America, 2002), paper ThD1, p. 401.
2. A. Sano, H. Masuda, E. Yoshida, T. Kobayashi, E. Yamada, Y. Miyamoto, F. Inuzuka, Y. Hibino, Y. Takatori, K. Hagimoto, T. Yamada, and Y. Sakamaki, in *European Conference on Optical Communication (ECOC)* (VDE, 2007), paper PD1.7.
3. A. J. Lowery, L. Du, and J. Armstrong, in *Optical Fiber Communication Conference (OFC)* (Optical Society of America, 2006), paper PDP39.
4. W. Shieh, X. Yi, and Y. Tang, in *Optical Fiber Communication Conference (OFC)* (Optical Society of America, 2007), paper OMP2.
5. S. L. Jansen, I. Morita, N. Takeda, and H. Tanaka, in *Optical Fiber Communication Conference (OFC)* (Optical Society of America, 2007), paper PDP15.
6. M. E. Marhic, Opt. Lett. **12**, 63 (1987).
7. N. Takato, K. Jinguji, M. Yasu, H. Toba, and M. Kawachi, J. Lightwave Technol. **6**, 1003 (1988).